OPERATION MANUAL

MorseMaster II Morse Trainer

Mike Huddleston KJ4LN
Stone Mountain Engineering Company
Box 1573 Stone Mountain, GA 30086

The MorseMaster II was designed to provide the most efficient and enjoyable vehicle for rapid mastering of the International Morse Code, or IMC, yet devised. The training method it employs is the method used by the US Army, as described in Army Technical Manual TM 11-459. The only modifications to this approach are those to include the punctuation and procedural symbols necessary to pass the FCC and VE tests for Amateur Radio licences.

AUDIO QUALITY. Fully half the components in your MorseMaster II are devoted to producing a pleasing audio output. The importance of a sound that is easy to listen to cannot be underestimated. A smooth and clean audio signal allows the student to relax and concentrate on the code characters with a minimum of fatigue.

In operation, the actual dits and dahs are produced by the Microprocessor, in the form of a rectangular wave form. The edges of this waveform are conditioned by a filter and transistor to have the 5-millisecond rise and fall times recommended by the ARRL. This smoothed envelope then is used to modulate an audio frequency square wave provided by an IC oscillator. This signal is further conditioned by a 5-stage audio filter, then applied to a conventional audio amplifier IC. The result is code that is truly pleasant to hear - audio quality unsurpassed in code practice sets costing several times the price of your MorseMaster.

The MorseMaster can be used to drive either headphones or a loudspeaker. The popular lightweight stereo headphones used with portable radios are ideal for private listening, and any 4-16 ohm speaker may be used for group practice sessions. If a speaker is to be used exclusively, you may elect to replace the 10-uF output coupling capacitor, C18, with a 100-uF unit. This allows more audio output power. On the other hand, if you plan to use headphones, the 10 uF capacitor provides more than ample power, while serving as an additional stage of high-pass filtering. Note that the output jack on your MorseMaster is a standard miniature (3.5mm) 2-circuit phone jack. Since the lightweight stereo headsets mentioned previously have 3-circuit plugs, you may need to use an adapter to get both earphones operational. A suitable adapter, the Radio Shack #274-368, sells for about a dollar.

OPTIONS. While the MorseMaster II by itself is a complete IMC trainer, there are provisions for two options that can be attached to enhance learning. The first permits the use of a telegraph key so that you may practice sending, as well as receiving, code. The MorseMaster II has a built-in Iambic keyer, similar to the types included in many of today's popular transceivers, or sold as add-ons. If you already own a key, whether a simple straight key, a semi-automatic "bug", or a squeeze paddle,

by all means use it with your MorseMaster. If you plan to buy one in the near future, you may want to go ahead and get it to help in your learning. The IMC student can often get himself "unstuck" on a particular troublesome character by sending it himself repeatedly and listening to it. To connect a straight key or bug, merely connect one of the key's terminals to the E4 connection on the MorseMaster, and connect the other to E2. To connect a paddle key for Iambic operation, connect its common leg to E2, its "dot" terminal to E4, and its "dash" to E3.

The second available option is a printer output. The MorseMaster II includes a serial printer output that will interface to a printer, or a computer terminal, and print out every character that it sends. While particularly helpful for beginners learning the code, printers are expensive, and unless you already own one or can borrow one, the additional help it will provide in learning the code is probably not worth the expense.

The printer output is serial, "quasi-RS232". True RS232 swings both positive and negative voltages, but the MorseMaster only uses positive. The majority of RS232 printers and terminals will accept this with no problem - I've used a Radio Shack TP-10 printer, a DecWriter terminal, and a Hazeltine CRT, and they all work fine. If you do buy a printer for your MorseMaster, be sure to check it out beforehand. As delivered, the MorseMaster operates at 600 baud, sends eight data bits and two stop bits, and no parity. It may be converted to 300 baud operation by simply removing R8 from the circuit board. Additionally, the printer must be able to generate its own line feed when it receives a carriage return. Most printers do this automatically. To connect a printer, only three lines are necessary, and perhaps only two, depending on the printer. The printer's common connection goes to E2, and its data input to E1. If it has a Data Terminal Ready (DTR) line, connect it to E3. The Radio Shack TP-10 uses a 4-pin DIN plug, with common on pin 3, data on pin 4, and DTR on pin 2.

DITS AND DAHS. A wonderful and complete discussion of IMC timing and content is given in the ARRL Handbook. The same information is available in the Army TM 11-459, but is obviously not as available. Briefly, the timing of Morse code is based on the dit, or dot, as the shortest time element. Given that a dit has a certain duration, proper IMC will have a dah, or dash, of three times the duration of the dit. The "dit" and "dah" names are preferable to the better-known "dot" and "dash" because the former mimics the actual sounds of the elements, while the latter suggests a printed representation. Since learning the code is a process of identifying the sounds of the characters, it is important to speak of, and think of, the characters in terms of dits and dahs. A dit or a dah is called an "element". The space, in time, between successive elements in a character is one dit time. The spacing between characters is three dit times, and the spacing between words is seven dit times. This is the timing you should expect on the 13- and 20-WPM tests.

The Novice test, however, differs. The characters are generally sent at a rate of about 13 WPM, but the spacing between them is stretched so that only five words are sent in one minute.

The reasoning is that characters sent at less than 13 WPM sound artificially long and drawn out. And the good part is that you only need to be able to recognize characters at 13 WPM to get through both the 5- and the 13-WPM code tests. For this reason, the MorseMaster uses 13 WPM characters for its sending practice for every speed from 4 to 13 WPM. And from 14 to 20 WPM, the MorseMaster uses 20 WPM characters, and adjusts the spacing between them to accomodate the 14- to 18- WPM rates. In this manner, the student need only be able to recognize Morse characters at two rates - 13 and 20 WPM - to be able to pass all code tests up to Amateur Extra.

A word is five characters. If we chose our characters randomly from the English alphabet and numbers, we would find that there is an average of 60 dit times, including spacings, in our hypothetical word. On the other hand, if we chose our word content based on commonly used letters and characters, we would find only 50 dit times. This is because the Morse alphabet uses its shortest characters for the most common letters. For example, the letter "E", the most frequent in English usage, is the shortest Morse character, being only a single dit. And so on, for most of the IMC characters. The word "PARIS" is taken to be a representative 5-character word for timing Morse transmission. It has 50 dit times, including spaces. This is the basis for FCC and VE testing for code speed. The word "CODEX", with 60 dit times, is representative of random letters and numbers, with no regard for usage frequency.

The MorseMaster bases its timing on the "PARIS" word, as, significantly, do the FCC and VE code tests. For example, at 13 WPM, the word "PARIS" would be sent 13 times. In this minute, then, would be 13x50=650 dit times. No matter what characters are sent, this is their rate. When the MorseMaster sends code at a rate of less than 13 WPM, the 650 dits/minute rate is preserved for the characters themselves, but the spacings between them are elongated. However, the 3:7 ratio of inter-character spacing to inter-word spacing is retained.

A further note on code speed is in order. Your MorseMaster uses a crystal-controlled microprocessor to provide the critical timing necessary for accurate code speed settings. For this reason, code speed selection is not infinitely variable, but only those speed settings needed for the most efficient learning process are made available. This is not a disadvantage - rather, you as the student are assured of "textbook" code rates and weighting. These are the same rates and weightings used by the FCC and the VE when you take your Amateur code tests.

FIRING UP THE MORSEMASTER II. In order to get going with your MorseMaster, you'll need either a speaker or set of headphones, and a source of power. The headphones, or speaker, must be terminated with a standard miniature (3.5mm) plug. The socket for it is located on the lower right of the MorseMaster circuit board. Speaker or headphone impedance is not critical, so just about anything you have hanging around the house will work. The power supply should be connected to the two terminals marked "AC or DC Input" on the left center of the circuit board. Any AC supply of 7-13 volts, or a DC supply of 10-18 volts will work

fine, as long as they can supply the 150 mA or so needed by the circuit. Suitable choices are the commonly available plug-in transformers offered by literally dozens of mail order houses and electronics retailers. If you want to use your MorseMaster in the car, a cigarette lighter plug can be used. Since the unit employs a bridge rectifier input circuit, polarity of the DC supply makes no difference.

The MorseMaster's microprocessor generates low-energy discrete harmonics of .4, 2 and 6 MHz. When operated near AM radios or televisions tuned to low VHF, interference may occur. The best solution is to move to another room, although a metal case shielding the MorseMaster can be used if desired.

CONTROLLING THE CONTROLS. The numerous switches and controls of the MorseMaster II are simple to understand and use. The **VOLUME** control and the **TONE** control are self-explanatory. The rest are used as follows:

RESET button. This button will stop any operation in progress, and ready the MorseMaster for the next command. As long as this im button is held down, a steady tone is output.

START button. Pressing this one starts the selected Morse lesson. When pressed, it turns on the tone for 0.3 seconds, waits one second, then starts outputting the selected Morse lesson.

REPEAT button. Pressing this button repeats the previous lesson, whether it completed or was terminated by the RESET button. You will find this button a tremendous help in every phase of your IMC learning process, whether just starting or preparing for the 20-WPM test. When you hear the same lesson twice, you not only are reinforced, but can verify the accuracy of your work. A unique feature of the MorseMaster, this button should be employed every step of the way. When pressed, it beeps and pauses just like the START button.

SPEED CONTROL. The large rotary switch in the lower left controls the code speed, as follows:

0	- 13	WPM	characters	at	4	WPM	rate;	keyer at	13 WPM
1	- 13	"	"		5	"	"	"	15 "
2	- 13	"	"		6	"	"	"	17.5 "
3	- 13	"	"		7.5	"	"	"	20 "
4	- 13	"	"		10	"	"	"	22.5 "
5	- 13	"	"		13	"	"	"	25 "
6	- 14	"	"		14	"	"	"	27.5 "
7	- 20	"	"		14	"	"	"	30 "
8	- 20	"	"		16	"	"	"	32.5 "
9	- 20	"	"		18	"	"	"	35 "
10	- 20	"	"		20	"	"	"	37.5 "
11	- 22	"	"		22	"	"	"	40 "
12	- 25	"	"		25	"	"	"	42.5 "
13	- 27	"	"		27	"	"	"	45 "
14	- 30	"	"		30	"	"	"	47.5 "
15	- 33	"	"		33	"	"	"	50 "

The speed control may be changed at any time, even in the midst of a character being sent. The differences between the keyer rates and the automatic rates will be covered subsequently.

SLIDE SWITCHES. The set of six small slide switches located to the immediate left of the microprocessor, commonly called DIP switches, are used to select the lesson and the number of characters to be sent. They are labelled A through F on the circuit board, and their ON and OFF positions are printed on the switch.

The lower two switches, E and F, select the number of code words to be generated. The switch settings are:

E off, F off: Generate one five-character word, then stop.
E off, F on: Generate 5 five-character words, then stop.
E on, F off: Generate 10 five-character words, then stop.
E on, F on: Generate 25 five-character words, then stop.

The upper four switches, A through D, select the lesson content, as follows:

D	C	B	A	Lesson Description
off	off	off	off	Lesson 1. Characters E I S T M O A N W
off	off	off	on	Lesson 2. Characters B C D G Q X Y Z 0(zero)
off	off	on	off	Lesson 3. Review. Half lesson 2, half 1
off	off	on	on	Lesson 4. Characters F H J K L P R U V
off	on	off	off	Lesson 5. Review. Half lesson 4, half 1,2
off	on	off	on	Lesson 6. Review. Equally from lessons 1,2,4
off	on	on	off	Lesson 7. Characters 1 2 3 4 5 6 7 8 9
off	on	on	on	Lesson 8. Review. Half lesson 7, half 1,2,4
on	off	off	off	Lesson 9. Review. Equally from 1,2,4,7
on	off	off	on	Lesson 10. Characters . , ? / AR SK BT
on	off	on	off	Lesson 11. Review. Half 10, half 1,2,4,7
on	off	on	on	Lesson 12. Trouble characters B 6 H 5 V 4
on	on	off	off	Lesson 13. Review. Half 12, half 1,2,4,7,10
on	on	off	on	Lesson 14. All characters, equally weighted
on	on	on	off	Lesson 15. All characters, PARIS weighting
on	on	on	on	Lesson 16. Keyer.

Lessons 1,2,4,7 and 10 are the only ones that introduce new characters. Lessons 1,2,4 and 7 are straight from the Army manual, while lesson 10, punctuation and procedural symbols, is added to complete the set required of Amateur licencees. The review lessons, 3,5,6,8,9,11 and 13, are of extreme benefit when used following a new character lesson. They review all characters learned to that point, while 5,8,11, and 13 emphasize the most recent lesson. This is accomplished by generating half the characters from the most recent group, and half from all the rest of the past groups.

As noted in the Army text, and confirmed by personal experience, the characters most confused by code listeners are given a special lesson and review.

Lessons 14 and 15 are the drill lessons. Once the characters themselves are learned, these lessons will be used for speed

improvement. Lesson 14 gives equal weighting for all characters - there are as many X's as E's, for example. This lesson should be used when the training lessons have been completed, but the student still has some problems with the less common letters. Lesson 15 approximates English language letter usage frequency. There are four times as many E's as X's, for example. Since the more common letters are also the shortest in terms of Morse elements, this lesson will run faster than Lesson 14. Use this lesson for speed improvement after you are comfortable with all IMC characters.

Lesson 16, the Keyer mode, differs from the rest. In the first place, the printer output is disabled. Secondly, the RESET button must be pressed to leave the keyer mode, once entered. When the keyer mode is entered by selection on the DIP switch, the Iabmic, or paddle mode is automatically selected. To use a straight key or bug, the REPEAT key must be held down while the RESET key is struck. The mode thus selected will remain in operation until an alternate mode is selected on the DIP switch and the RESET key is pressed. Lastly, the code rates are different. They start at 13 WPM, include 20, and go all the way to 50 WPM. These were shown in the table on page 4.

LEARNING THE CODE. Generally speaking, the MorseMaster II can effectively teach the IMC with only an earphone and a power supply. A key is a great help, if you have one, as is a printer. Either or both will save you time when first learning.

NOVICE TRAINING. For the person just starting to learn the code, there are several things to keep in mind. First, forget everything you ever learned about dots and dashes. Mastering IMC is based on the concept of hearing charaters, not elements, as they are sent. Every character has a distinct sound, and it is this that you should learn. Beginners often make the mistake of learning the dots and dashes; then, when they hear code, they must listen for these separate elements, and then look them up in their brain to convert them to letters. This is a two-step process, whereby recognizing the letters by their sound is only a single step. Frankly, either approach will work on the 5-WPM code test, but the 2-step method simply will not work at 13 WPM and beyond. It is best to start out on the right foot by learning the characters by sound.

The second thing to keep in mind is that everyone gets frustrated at first. After all, IMC is a new language, and it takes some time. The good news is, that if you stick with it, you will learn it. The Army manual says that the average learner will get up to the 5-WPM plateau in 18 hours of practice. The top 5% of students learn it in only about 5 hours, while the lowest 5% may take as long as 27 hours. The important thing is to practice every day. If you can schedule an hour a day, you are pretty well guaranteed to be able to pass your Novice code test at the end of a month, and probably much earlier.

Your first lesson should be from Lesson 1, and from there you should follow the lessons in numerical order through lesson 15. Don't leave a lesson until you are comfortable with it. Work at 5 WPM, and only revert to 4 if a particular lesson is

giving you trouble. Start out each new character lesson with only one word at a time selected (Switches E and F both off). Press the START button and listen to the characters. Look at the Morse list at the end of this manual and identify the characters you have heard. Use the REPEAT button and listen to them again. Write them down as you hear them. Continue REPEATing the same group, and writing each character down, until you can recognize them. Now, press the START button again for a new set from this group. Continue in this manner until you have heard all the members of this group several times, then change the switch settings for 5 words. Try to copy the entire transmission. At its end, REPEAT and write the new letters directly below the last ones. Do this as many times as it takes until you are sure you've gotten them all. Don't leave this lesson until you can copy 10 words without an error on the first try.

Use this method on each lesson with new characters in it. On review lessons, you may feel comfortable with starting out with 5 words per transmission, or just one. In every case, use the REPEAT button to verify your work.

At the beginning of each practice session, use the first five or ten minutes to review the last lesson learned, before starting the new one. Try to complete a lesson at each setting.

Once the new character lessons have been learned, lessons 14 and 15 should be used for practice and to improve your speed. It is a good idea to be able to copy at 6 WPM for the 5-WPM test, as that extra buffer gives the confidence to overcome any stage fright on test day. Always go back and repeat lessons whenever you feel you need them.

GENERAL CODE TEST. The Army code manual does not give expected learning times for exactly 13 WPM, but interpolating their data shows the average learner hitting 13 after about 65 hours of practice. Personal experience bears this out. The student practicing for this test should concentrate on Lesson 15, and use the Keyer provision as much as possible. The review lessons will also prove helpful, as well as providing a break from Lesson 15 alone. Of course, the introductory lessons and techniques described in the Novice section above may be used as well. A special speed - 14 WPM characters and 14 WPM words - is provided to give the student a little extra confidence on the code exam. Obviously, code at 14 WPM will sound somewhat different than the test material, so do the bulk of your work at 13. Remember, the sound of the characters is all-important.

THE BIGGIE - 20 WPM. The ARRL and the FCC call the Amateur Extra the "Expert" license. And well they should. While the 20-WPM code test has been passed by students using the MorseMaster alone, this is not the recommended procedure. Once you pass the General (or Advanced), buy a rig and get on the air. Work CW. Learn the content of QSOs, and get relaxed with code. Use your MorseMaster, as in the General licence section, to augment and improve your code ability. Learn to copy behind. This technique, the ability to write code characters two or three behind the one you are now hearing, is embraced by nearly all serious high-speed CW operators. It may be helpful to repeat the Novice steps

at 14 WPM to get accustomed to the different sound of 20 WPM code, then gradually increase speed. The key is to do whatever works for you - the MorseMaster's versatility will provide it.

THE MORSE CHARACTERS. In lesson order.

SOUND	CHARACTER	HINTS ON LISTENING AND COPYING
dit	E	Write with a single stroke, lower case
di-dit	I	Single vertical line, no dot
di-di-dit	S	
DAH	T	
DAH-DAH	M	
DAH-DAH-DAH	O	
di-DAH	A	
DAH-dit	N	
di-DAH-DAH	W	
DAH-di-di-dit	B	
DAH-di-DAH-dit	C	
DAH-di-dit	D	
DAH-DAH-dit	G	
DAH-DAH-di-DAH	Q	
DAH-di-di-DAH	X	
DAH-di-DAH-DAH	Y	
DAH-DAH-di-dit	Z	Add a horizontal line thru its center
DAH-DAH-DAH-DAH-DAH	0	(Zero). Add diagonal slash thru it
di-di-DAH-dit	F	
di-di-di-dit	H	
di-DAH-DAH-DAH	J	
DAH-di-DAH	K	
di-DAH-di-dit	L	
di-DAH-DAH-dit	P	
di-DAH-dit	R	
di-di-DAH	U	Make with square corners
di-di-di-DAH	V	(Sounds like Beethoven's fifth)
di-DAH-DAH-DAH-DAH	1	Make a line under it
di-di-DAH-DAH-DAH	2	
di-di-di-DAH-DAH	3	
di-di-di-di-DAH	4	
di-di-di-di-dit	5	Square corners
DAH-di-di-di-dit	6	
DAH-DAH-di-di-dit	7	
DAH-DAH-DAH-di-dit	8	
DAH-DAH-DAH-DAH-dit	9	
di-DAH-di-DAH-di-DAH	.	(period)
DAH-DAH-di-di-DAH-DAH	,	(comma)
di-di-DAH-DAH-di-dit	?	Sounds like "ditty dum dum ditty"
DAH-di-di-DAH-dit	/	Sounds like "shave and a hair cut"
di-DAH-di-DAH-dit	AR	Printer makes a "+"
di-di-di-DAH-di-DAH	SK	Printer makes a "!"
DAH-di-di-di-DAH	BT	Printer makes a "="

MorseMaster II

ASSEMBLY AND TECHNICAL MANUAL

VERSIONS 2.6, 2.7, 2.8

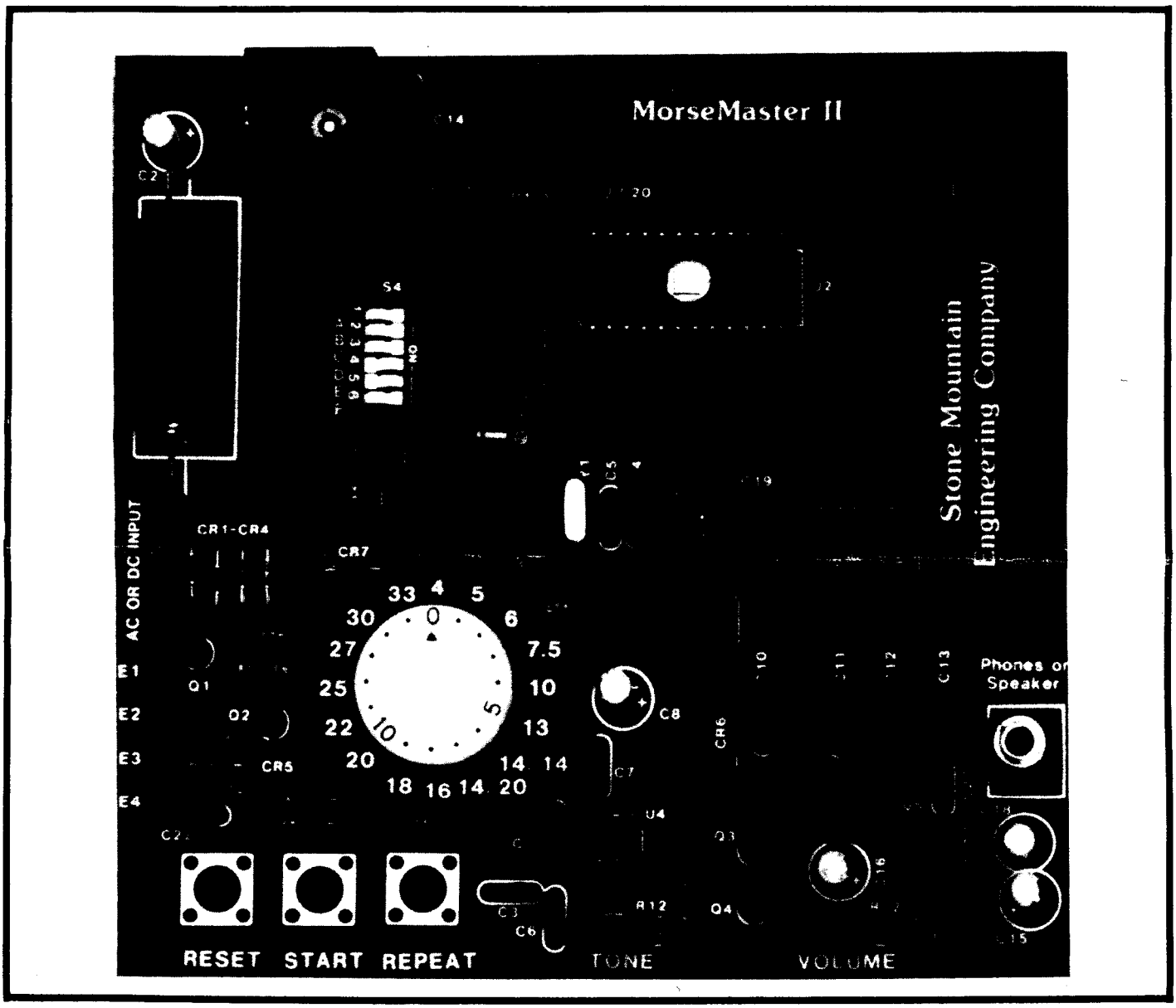

Stone Mountain Engineering Co.

Box 1573 Stone Mountain GA 30086

MORSEMASTER II SPECIFICATIONS

AUTOMATIC MORSE TRANSMISSION PERFORMANCE

Number of Training Lesson Types 15
Training Method . . . . . Modified US Army Code Groups
Number of Different Code Sequences . . . 13,107 for Each Lesson
Number of Code Speeds 16
Speed Range . . . . . 4 WPM to 33 WPM
Accuracy of Code Speeds . . . . . Better Than 1%
Weighting . . . . . Same as FCC/VE Amateur Tests
Characters per Group 5
Groups per Transmission . . . . 1, 5, 10 or 25; User Selectable

KEYER TRAINER SPECIFICATIONS

Keyer Training Modes . . . . Full Iambic, Bug, or Straight Key
Number of Iambic Keyer Element Speeds 16
Iambic Keyer Element Speed Range . . . . . 13 WPM to 50 WPM
Accuracy of Iambic Keyer Speeds . . . . . Better Than 1%

AUDIO PERFORMANCE

Frequency Range . . . . . Approx. 400 to 1200 Hz.
Low Pass Filter . . . . . 3-Pole, 3 dB Point Approx. 1000 Hz.
High Pass Filter . . . . . 2-Pole, 3 dB Point Approx. 150 Hz.
Speaker or Headphone Impedance . . . 4 Ohm Minimium, No Maximum
Maximum Power Output . . . . . Approx. 0.5 Watts into 4 Ohms

PRINTER INTERFACE SPECIFICATIONS

Minimum Printer Width . . . . . 30 Columns
Transmission Mode . . . . . Serial
Data Representation . . . . . 7-Bit ASCII
Format . . . . . 8 Data Bits, No Parity, 2 Stop Bits
Baud Rate . . . . . 300 or 600, User Selectable
Mark Level . . . . . 0.2 V (max)
Space Level . . . . . 8.0 V (min)
Control Line (Optional) . . . . . Data Terminal Ready (DTR)

INTEGRATED CIRCUIT COMPLEMENT

Microprocessor . . . . . Any member of 8035/8048 Family
Program Memory . . . 2716-Type 2048x8 Erasable Read-Only Memory
Audio Oscillator . . . . . LM555 Timer
Audio Amplifier LM380N-8
Latch . . . . . 74SC373, 74HCT373, or 74LS373
Voltage Regulator LM7805T

POWER REQUIREMENTS

Input Voltage . . . . . 7-13 VAC or 10-18 VDC
Current Required . . . . . 150 mA, typical
Plug-In Transformer . . . . . 120 VAC, 60 Hz, 5W (max)

MorseMaster II Construction Manual

Mike Huddleston KJ4LN
Stone Mountain Engineering Co.
Box 1573, Stone Mtn, GA 30086

Your MorseMaster kit may be assembled easily in an evening, probably in less than two hours. You will need a small, low power, fine-tip soldering iron and some electronics-grade rosin-core solder, a pair of diagonal cutters, needle-nose pliers, a small screwdriver, and about two linear feet of standard aluminum foil from your kitchen.

The parts for the MorseMaster II are packed in bags as shown in the parts list. The first step on receipt of your kit is to inventory these. DO NOT REMOVE THE INTEGRATED CIRCUITS. U1, U2, and U3 are static-sensitive devices, and may be damaged if handled carelessly. Proper handling procedures will be covered later, when these parts are to be unpacked. In the meantime, they may be identified for your initial inventory by reading the part numbers without removing them from their protective backing.

PARTS IDENTIFICATION. Since many builders are unfamiliar with the various component labelling conventions, the following should help:

BAG 1 : Both the 1N4001 and the 1N914 diodes are 2-terminal devices. If the numbers cannot be read, the 1N4001's are larger, and there are four of them as opposed to three of the 1N914's. The 2N3904 transistors may be labelled "2N3904" or "07H04".

BAG 2 : All parts values should be readable. In some cases, higher voltage devices may be substituted. The 0.1uF capacitors may be labelled ".1" or "104". The 0.01uF capacitors may be labelled ".01" or "103". If there is any doubt about component values, comparing the supplied quantities to the parts list should clear it up.

BAG 3 : Aside from the two identical potentiometers, the rest of this bag is simply 1/4-watt resistors. They may be supplied as 10% tolerance devices (silver band), or 5% (gold). Their color codes, in order, are:

10K ohm : Brown, black, orange, silver (or gold);
22K ohm : Red, red, orange, silver (or gold);
1000 ohm : Brown, black, red, silver (or gold);
4.7K ohm : Yellow, violet, red, silver (or gold);
2.7 ohm : Red, violet, gold, silver (or gold).

BAG 5 : Contains the all the socketable integrated circuits (U1 through U5), all their corresponding sockets (SO1 through SO5), the DIP switch, S4, and the rotary switch, S5. Regardless of the marking on the microprocessor, U1, it is the largest IC (40 pins). Only U1, U2 and U3 are apt to be damaged by static; however, since it is easy to break the leads off any IC, it is best to leave all ICs, their sockets, S4 and S5 untouched until you are ready to install them.

HINTS. Keep your soldering iron tip clean. A damp washcloth or sponge may be used for this, kept next to the iron. Simply draw the iron's tip across the washcloth (or sponge) just prior to tinning the iron to solder a connection.

After soldering each connection, carefully inspect it to insure that the PC board hole is filled and the solder didn't accidentally bridge to another run. These solder bridges are easily made, and are tough to find after the whole board is completed.

The resistors, diodes, and jumpers all have 0.400" lead spacing on the circuit board. A neat, professional appearance can be obtained by pre-forming the leads before inserting them into the board. An easy way of doing this is to use U6, the LM-7805 voltage regulator IC, as a bending jig. Just lay the component or jumper on U6's tab, and bend the leads sharply around it. The components will then slip easily into place.

The MorseMaster circuit board needs 16 wire jumpers. Rather than use any old wire you may have around, save the resistor leads cut off after the resistors are soldered in. These are tinned copper, so they solder easily, and they are straight, so they lend a professional appearance.

The ICs, transistors, diodes and electrolytic capacitors are polarized. They MUST be oriented correctly on the circuit board, or the unit will not function correctly, and could be damaged.

The diode's polarity is indicated by a band across one end, the cathode end. The circuit board shows diode orientation with the electrical symbol for a diode, which resembles an arrowhead pointing into a bar. The bar end of the symbol is the cathode end. Therefore, insert each diode so that its banded end is in the same hole as the bar on the diode symbol.

Electrolytic capacitors may have either their negative (-) or positive (+) leads identified. The circuit board identifies positive leads with the conventional plus sign (+). Obviously, the positive lead goes in this hole.

Integrated circuits identify their "pin 1" in a variety of ways. There may be a dot adjacent to pin 1, an indentation in the end of the package near pin 1, or a white band around the end near pin 1. Pin numbering follows this convention: If an IC chip is viewed with its pins down and the identified end (indented, banded end) at 12 o'clock, pin 1 is at 11 o'clock. Numbering follows sequentially counter-clockwise, ending with the highest-numbered pin at one o'clock. The circuit board shows the identified end by an indentation on the silkscreen, and IC sockets may either show the identified end with an indentation, or pin 1 with a color dot.

Transistor orientation in the MorseMaster is no trouble. Just align the transistor so its shape corresponds with the silkscreened outline on the circuit board, and solder it in. The transistors follow the TO-92 convention of leads in the order of Emitter, Base and Collector, left to right, if the device is viewed with the leads down and the flat side of the package facing the viewer.

STEP-BY-STEP CONSTRUCTION SEQUENCE

All parts should be soldered in as they are inserted. Leads should be cut off, and remember to save the resistor leads. Items marked with an asterisk (*) must be correctly oriented. Check off each step as you complete it.

( ) Remove the IC sockets from their protective pad in Bag 5, taking care not to remove the ICs themselves. Pay particular attention to solder bridges and orientation when soldering them in.

( ) SO1 * 40 pin. Install in U1 location. Watch pin 1!
( ) SO2 * 24 pin. Install in U2 location.
( ) SO3 * 20 pin. Install in U3 location.
( ) SO4 * 8 pin. Install in U4 location.
( ) SO5 * 8 pin. Install in U5 location.

( ) C1 * The 2200uF, or larger, capacitor from Bag 2.

( ) S1
( ) S2
( ) S3
Push button switches in Bag 4. Clip off the two inner plastic standoff posts on the back of each switch prior to insertion.

( ) S4 * DIP switch from Bag 5. Insert it so that the side marked "ON", or marked with a color dot, is away from C1.

( ) S5 * The large rotary switch from Bag 5. This one will require a lot of solder for its electrical connection, but is held mechanically by friction. Trim its pins once it is soldered in.

( ) J1 The phone jack from Bag 4. Cut off the eyelets on its solder tabs before insertion, and work it carefully into place. Make doubly sure that it seats firmly prior to soldering.

( ) Q1 * 2N3904-type Transistors, all from Bag 1.
( ) Q2 *
( ) Q3 *
( ) Q4 *

( ) CR1 * 1N4001 rectifier diodes, Bag 1. Pre-form to 0.400".
( ) CR2 *
( ) CR3 *
( ) CR4 *

( ) CR5 * 1N914 switching diodes, Bag 1. Pre-form to 0.400".
( ) CR6 *
( ) CR7 *

( ) Y1 6.00 MHz crystal, Bag 1.

( ) R12 * Potentiometers from Bag 3. Work them carefully into
( ) R22 * their holes, knobs facing the edge of the board.

RESISTORS, Bag 3. Pre-form to 0.400" lead spacing.

( ) R1 10K ohm; Brown, black, orange, silver or gold.
( ) R2
( ) R7
( ) R10
( ) R18

( ) R3 22K ohm; Red, red, orange, silver or gold.
( ) R15
( ) R16
( ) R23

( ) R4 1000 ohm; Brown, black, red, silver or gold.
( ) R5
( ) R6
( ) R8
( ) R9
( ) R13
( ) R14
( ) R17

( ) R11 4700 ohm; Yellow, violet, red, silver or gold.
( ) R19
( ) R20
( ) R21

( ) R24 2.7 ohm; Red, violet, gold, silver or gold.

( ) JUMPERS. Using the resistor wire, insert all 16 jumpers into the circuit board locations marked with a solid line. Pre-form to 0.400" spacing.

( ) C2 * 4.7 uF Radial Electrolytics, Bag 2
( ) C8 *

( ) C5 18 pF Disc capacitor, Bag 2.

( ) C3 0.1 uF Disc capacitors, Bag 2. Marked ".1" or "104".
( ) C4 (C14 is to be installed after U6)
( ) C6
( ) C9
( ) C10
( ) C11
( ) C12
( ) C13
( ) C17
( ) C19
( ) C20
( ) C22

( ) C7 0.01 uF Disc capacitors, Bag 2. Marked ".01" or "103"
( ) C21

(✓) C15 * 10 uF Radial Electrolytics. Bag 2.
(✓) C16 *
(✓) C18 *

( ) U6 * Slip the heatsink from Bag 1 onto U6, the LM7805 regulator, then insert U6 into its position, observing the silkscreen layout. Insert the 4-40 x 1/4 screw from Bag 1 up through the bottom of the board, and fasten U6 and the heatsink to the board using the 4-40 nut. After it is solidly attached, solder it in.

( ) C14 The last 0.1 uF disc capacitor, from Bag 2.

( ) T1 Wall transformer. If there is a plug attached, cut it off, and strip back the wires 1/4". Solder them into the holes marked "AC or DC input".

Preliminary Test. Before inserting any ICs, power the unit up by plugging in the wall transformer (120 VAC, 60 Hz). If you have a voltmeter, measure the voltage across C1 (should be 10-18 volts), and the voltage across C2 (should be 4.75 to 5.25 volts). If either voltage is out of tolerance, unplug the power supply and look for the wiring error. Do not reconnect until the problem is found and corrected. If you do not have access to a meter, a close and careful visual inspection will have to suffice at this point.

( ) U4 * 555 Timer IC, Bag 5.
( ) U5 * 380N-8 Amplifier IC.

These are not static-sensitive, must be oriented correctly.

Audio Test. Plug the unit in, and plug in headphones or speaker. A tone should be heard when the RESET switch is pressed. Adjust the TONE and VOLUME controls to insure that they function properly. Correct any problem in this area before proceeding.

Lay about two linear feet of aluminum foil from a standard roll across the surface of your work area. This will be used as a constant-potential surface to minimize the possibility of static discharge damaging U1, U2 or U3. Lay the circuit board on the foil so that the runs on the bottom of the board are in contact with the foil. Remove the ICs, still attached to their pad, from Bag 5, and place the pad on the foil. While keeping one hand on the foil, pick up each IC in its turn by its ends, and short its pins to the foil. If its pins are splayed, bend them in by pushing them onto the foil until they are straight. Insert them in the following order: (Watch pin 1!)

( ) U1 * 40-pin 8035-type microprocessor.
( ) U2 * 24-pin programmed 2716-type EPROM.
( ) U3 * 20-pin 74SC373 latch (or substitute).

Attach the four self-adhesive rubber feet from bag 4, one in each corner of the bottom of the circuit board.

CONGRATULATIONS! Your MorseMaster II is now complete. For a final test, run through all the switch setting by referring to the Operator's Manual, and insure that everything is functional.

If any operational problems are encountered, the frequent offenders are, in order of likelihood:

1. Cold solder joints, making intermittent connection;
2. Solder bridging and causing a short circuit;
3. Wrong polarity on capacitors, diodes, or ICs;
4. Missing jumpers.

In the event that your unit still refuses to operate, and you can't find the problem, Stone Mountain Engineering will repair it for a flat fee of $15.00 plus $2.50 shipping (domestically), providing the following conditions are met:

1. The unit must be fully assembled.
2. There must be no damage to the circuit board.
3. All parts used must be as supplied in the kit.
4. Rosin-core solder must have been used in assembly.
5. The unit must not have been abused in any way.

Carefully pack your MorseMaster in shock-absorbing material, enclose a description of the problem and a check for $17.50, and mail to: Stone Mountain Engineering Co., Box 1573, Stone Mountain, GA, 30086. If your failure was due to a defective component, replacement will be free of charge. MorseMaster repairs carry a 90-day limited warranty.

For those builders wishing to build their own MorseMaster II from scratch, a list of sources for the required parts is attached, as is a full-scale printed circuit layout. The vendor names on the source parts list are abbreviated, and stand for:

DK - Digi-Key Corp., Box 677, Thief River Falls, MN, 56701;
RS - Radio Shack;
ALL - All Electronics, Box 20406, Los Angeles, CA, 90006;
AMP - AMP Inc., Harrisburg, PA, 717-564-0100 (call for the name of your nearest distributer);
SME - Stone Mountain Engineering Co. (address is above)

Stone Mountain's prices are: Programmed 2716 EPROM (PN 280301) is $5.00, and silkscreened circuit board (PN 280311) is $12.00. All orders must include $2.50 P&H, and applicable sales tax if shipped to a Georgia address.

Parts substitutions may be made if desired. The transistors and diodes may be freely substituted with units of higher capability, and capacitor working voltages may increase. The 8035-series microprocessor may be any one of the following types: 8035, 8039, 8048, 8049, 8050, 80C35, 80C39, 80C48, 80C49, 80C50, 8748 or 8749. The 6.000 MHz crystal MUST be as specified.

ENJOY YOUR UPGRADE!

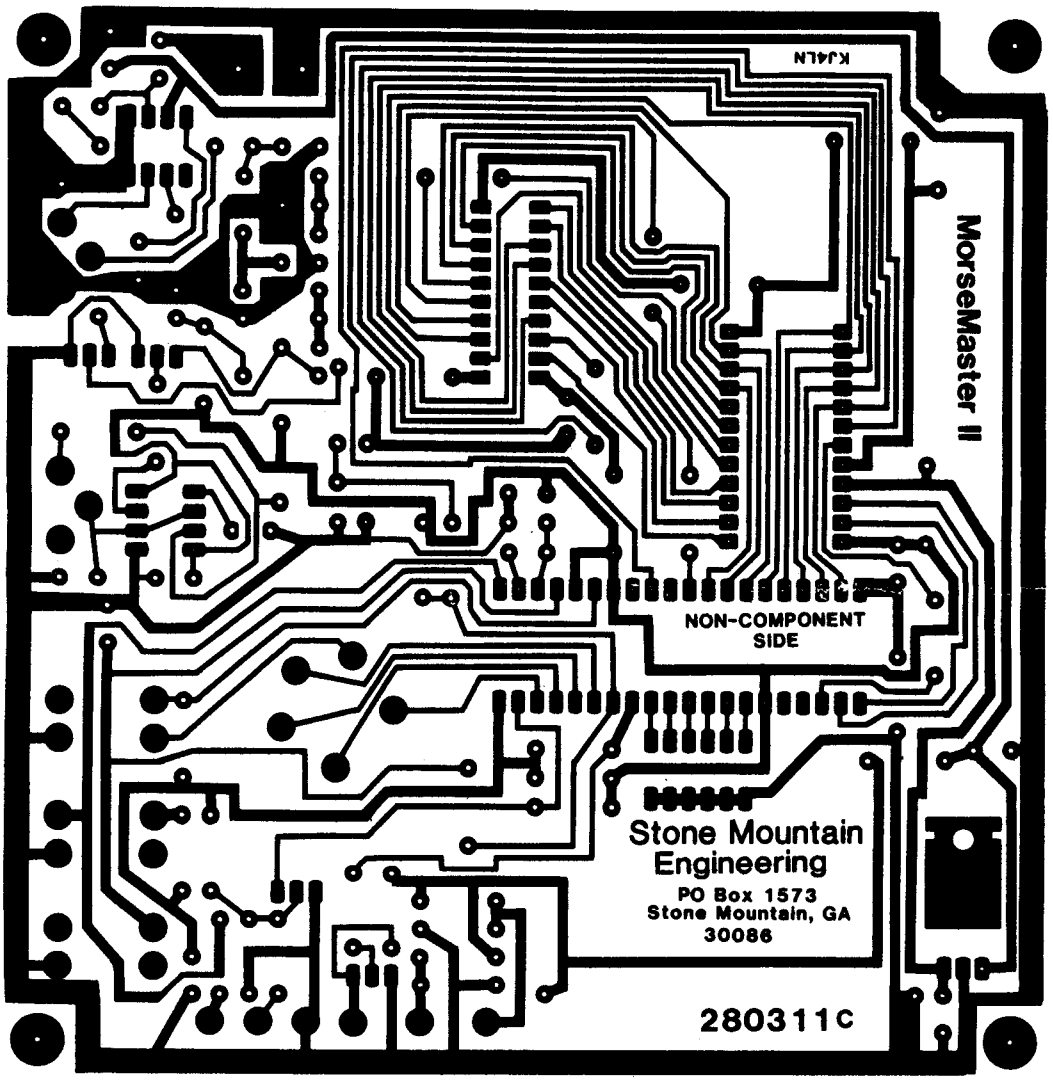
K J4LN
MorseMaster II
NON-COMPONENT SIDE
Stone Mountain Engineering
PO Box 1573
Stone Mountain, GA
30086
280311C

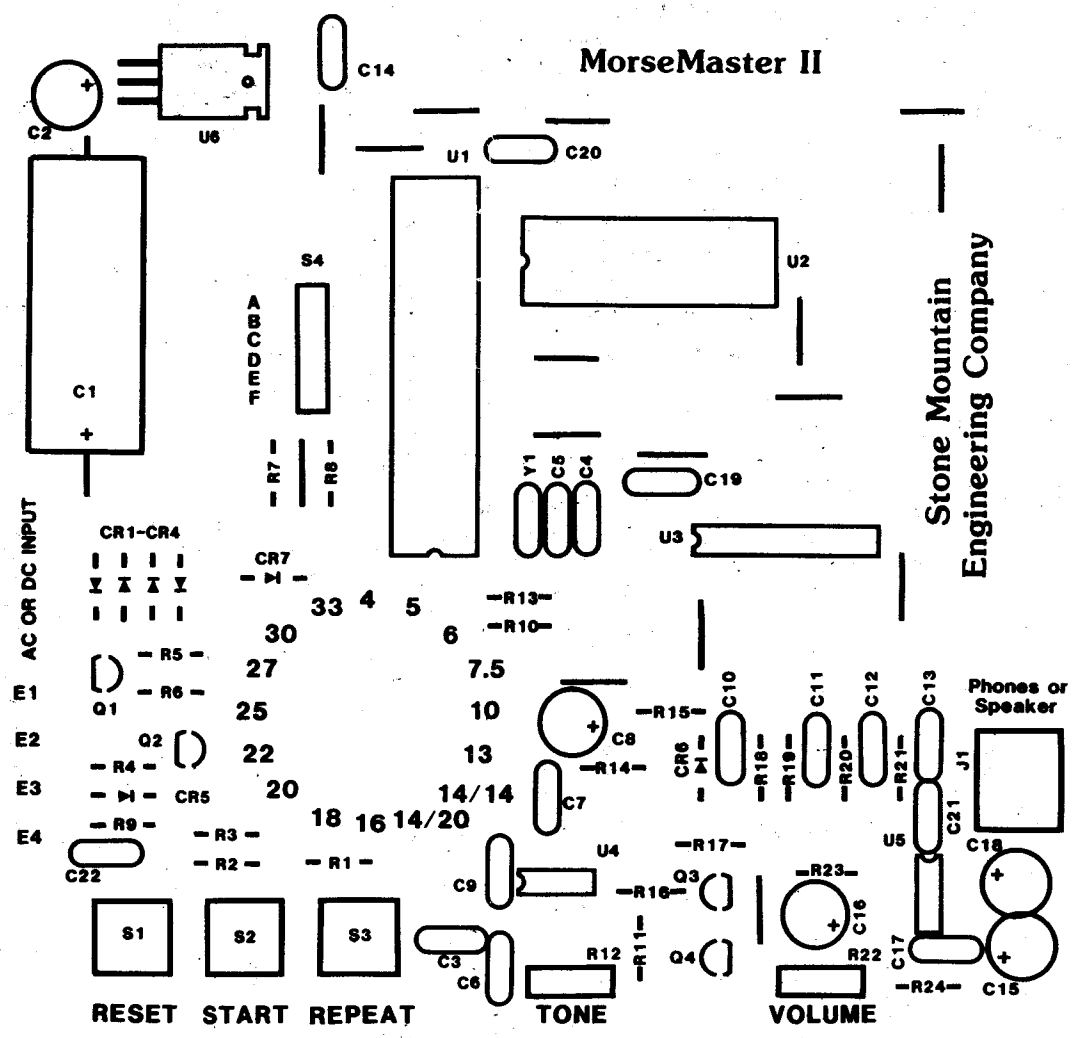
MorseMaster II
Stone Mountain
Engineering Company
C14
C2
U6
U1
C20
U2
S4
A
B
C
D
E
F
C1
R7
R8
Y1
C5
C4
C19
U3
CR1-CR4
CR7
AC OR DC INPUT
E1
E2
E3
E4
R5
R6
Q1
Q2
R4
CR5
R9
C22
R3
R2
R1
33
4
5
6
30
27
25
22
20
18
16
14/20
14/14
13
10
7.5
R13
R10
C8
R14
C7
C9
U4
R16
R12
R11
C3
C6
R15
C10
CR6
R18
R19
C11
R20
C12
R21
C13
Phones or
Speaker
J1
C21
U5
C18
R17
Q3
Q4
R23
C16
R22
C17
R24
C15
S1
S2
S3
RESET
START
REPEAT
TONE
VOLUME

Component packaging, MorseMaster II

SEMICONDUCTORS

CR1 - CR4	4	1N4001 Rectifier Diodes	BAG 1
CR5 - CR7	3	1N914 Switching Diodes	BAG 1
Q1 - Q4	4	2N3904 Transistors	BAG 1
U1	1	8035 Family Microprocessor	BAG 5
U2	1	2716 EPROM (Programmed)	BAG 5
U3	1	74SC373, 74HCT373, or 74LS373	BAG 5
U4	1	LM555 IC Timer	BAG 5
U5	1	LM380N-8 Audio Amplifier	BAG 5
U6	1	LM7805T 5V Voltage Regulator	BAG 1

CAPACITORS

C1	1	2200uF, 25V (or larger) Axial	BAG 2
C2,C8	2	4.7uF, 25V Radial Electrolytics	BAG 2
C3,C4,C6,C9,C10, C11,C12,C13,C14, C17,C19,C20,C22	13	0.1uF Ceramic Discs	BAG 2
C5	1	18pF Ceramic Disc	BAG 2
C7,C21	2	0.01uF Ceramic Discs	BAG 2
C15,C16,C18	3	10uF, 25V Radial Electrolytics	BAG 2

RESISTORS

R1,R2,R7,R10,R18	5	10K ohm, 1/4 W, 10% Resistors	BAG 3
R3,R15,R16,R23	4	22K ohm, 1/4 W, 10% Resistors	BAG 3
R4,R5,R6,R8,R9, R13,R14,R17	8	1000 ohm, 1/4 W, 10% Resistors	BAG 3
R11,R19,R20,R21	4	4.7K ohm, 1/4 W, 10% Resistors	BAG 3
R12,R22	2	20K ohm PC-mount Potentiometer	BAG 3
R24	1	2.7 ohm, 1/4 W, 10% Resistor	BAG 3

MISCELLANEOUS

Y1	1	6.0 MHz Series Resonant Crystal	BAG 1
J1	1	3.5mm Miniature Phone Jack	BAG 4
S1,S2,S3	3	PC-mount Push-Button Switches	BAG 4
S4	1	6 Station DIP Switch	BAG 5
S5	1	16-position BCD Rotary Switch	BAG 5
SO1	1	40-pin DIP Socket	BAG 5
SO2	1	24-pin DIP Socket	BAG 5
SO3	1	20-pin DIP Socket	BAG 5
SO4,SO5	2	8-pin DIP Sockets	BAG 5
	1	Printed Circuit Board	LOOSE
	1	Heat Sink for U6	BAG 1
	4	Self-adhesive Rubber Feet	BAG 4
	1	4-40 x 1/4 Screw and Nut	BAG 1
T1	1	12 Volt Wall Transformer	LOOSE

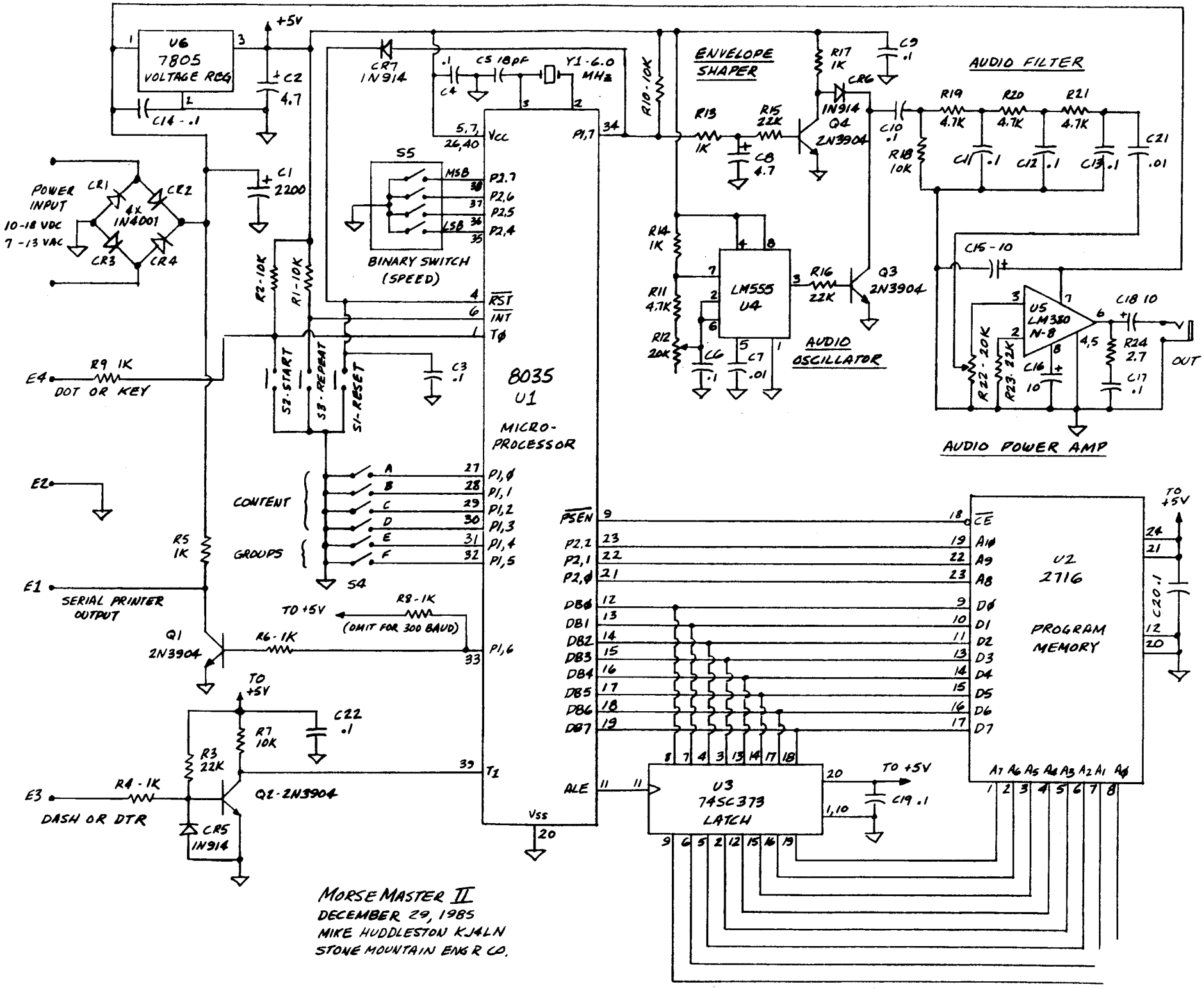
U6
7805
VOLTAGE REG
+5V
C2
4.7
C14 - .1
C1
2200
POWER INPUT
10-18 VDC
7 - 13 VAC
CR1
CR2
CR3
CR4
4X
1N4001
CR7
1N914
C4
.1
C5 18pF
Y1 - 6.0 MHz
R10 - 10K
S5
MSB
LSB
BINARY SWITCH
(SPEED)
R2 - 10K
R1 - 10K
S2 - START
S3 - REPEAT
S1 - RESET
C3
.1
E4
R9 1K
DOT OR KEY
8035
U1
MICRO-PROCESSOR
Vcc
Vss
P1,7
RST
INT
T0
P2,7
P2,6
P2,5
P2,4
CONTENT
GROUPS
A
B
C
D
E
F
S4
P1,0
P1,1
P1,2
P1,3
P1,4
P1,5
E2
E1
SERIAL PRINTER OUTPUT
R5
1K
Q1
2N3904
R6 - 1K
TO +5V
R8 - 1K
(OMIT FOR 300 BAUD)
P1,6
C22
.1
R7
10K
R3
22K
E3
R4 - 1K
DASH OR DTR
Q2 - 2N3904
CR5
1N914
T1
PSEN
P2,2
P2,1
P2,0
DB0
DB1
DB2
DB3
DB4
DB5
DB6
DB7
ALE
U3
74SC373
LATCH
C19 .1
ENVELOPE SHAPER
R13
1K
C8
4.7
R15
22K
R17
1K
CR6
1N914
Q4
2N3904
C9
.1
R14
1K
R11
4.7K
R12
20K
C6
.1
C7
.01
LM555
U4
R16
22K
Q3
2N3904
AUDIO OSCILLATOR
AUDIO FILTER
C10
.1
R18
10K
R19
4.7K
R20
4.7K
R21
4.7K
C11
.1
C12
.1
C13
.1
C21
.01
C15 - 10
U5
LM380
N-8
C16
10
R22 - 20K
R23 - 22K
C18 10
R24
2.7
C17
.1
OUT
AUDIO POWER AMP
U2
2716
PROGRAM MEMORY
CE
A10
A9
A8
D0
D1
D2
D3
D4
D5
D6
D7
A7 A6 A5 A4 A3 A2 A1 A0
C20 .1
MORSE MASTER II
DECEMBER 29, 1985
MIKE HUDDLESTON KJ4LN
STONE MOUNTAIN ENG R CO.

THEORY OF OPERATION

The heart of the MorseMaster II is an 8035-type single-chip microcomputer. This device has its own internal read/write memory, and supports external program memory in the form of a 2716 2048x8 Erasable, Programmable, Read-only Memory, or EPROM for short. The MorseMaster II program uses about half of it for its program. The 74SC373 is used as an address latch for the external EPROM memory. Additional information on this configuration may be obtained by consulting an 8035 data book.

The microprocessor is responsible for decoding the switch inputs and generating the Morse output. This output, at pin 34, is an inverted Morse signal that turns on Q4 when there is to be no tone output, and turns it off when there is. The combination of C8, R13 and R10 provide the 5-ms rise and fall times for the Morse signal. Increasing C8's value will increase the rise/fall time of the tone, and vice-versa. The LM555 audio oscillator, U4, runs all the time. Its output is gated by the smoothed Morse signal via Q4 and CR6, and then applied to a conventional passive filter. The low-pass portion of the filter consists of R19, C11, R20, C12, R21, and C13; it is responsible for removing the harmonics of the square wave produced by U4. The high-pass portion of the filter consists of C10, R18, C21, and R22; its job is to get any low frequency 'thumping' which C8 didn't completely remove.

The LM380N-8 audio amplifier is straightforward. It uses a smaller-than-usual output capacitor, C18, to act as a further high pass filter. To use the MorseMaster for maximum output power, C18 can be increased up to about 150 uF, and power output will increase somewhat proportionally. C8 may then be increased up to about 10 uF to counteract the additional low-frequency transmission; i.e., the thumping.

Q1 and Q2 are used solely for the printer option. One of the jobs of the microprocessor is to provide an ASCII serial character from pin 33 after each corresponding Morse transmission. Q1 inverts the data and swings its output between about 0.2 and 8.0 volts. Q2 is used as a buffer for the printer's Data Terminal Ready line, if one is used. R4 and CR5 keep the DTR line from damaging Q2 if it should swing maximum RS232 levels.

A note on the DTR line is in order. In most cases, the printer or CRT you elect to use will not need one, especially at the relatively low data rates of 300 to 600 baud. However, if your printer does, be aware that it may cause some degradation of the MorseMaster's performance, as the MorseMaster must stop what it is doing in order to wait for the printer to get ready. If you plan to use a printer with the DTR line, time two identical Morse transmissions (using the REPEAT key); one with the printer attached and one without. In all likelihood there will be no difference. But if there is, you should adjust your Morse data rates to accomodate.

The power supply is thoroughly conventional, using a bridge rectifier input so AC or DC (of either polarity) may be used to power the unit. A large filter capacitor is employed, as is a 7805-type 5-volt regulator.

Sources for MorseMaster II Parts

SEMICONDUCTORS

CR1 - CR4	4	1N4001 Rectifier Diodes	DK 1N4001
CR5 - CR7	3	1N914 Switching Diodes	DK 1N4148
Q1 - Q4	4	2N3904 Transistors	DK 2N3904
U1	1	8035 Family Microprocessor	DK INS8035LN-6
U2	1	2716 EPROM (Programmed)	SME 280301
U3	1	74SC373, 74HCT373, or 74LS373	DK 74LS373N
U4	1	LM555 IC Timer	DK LM555CN
U5	1	LM380N-8 IC Audio Amplifier	DK LM380N-8
U6	1	LM7805T 5V Voltage Regulator	DK LM7805CT

CAPACITORS

C1	1	2200uF, 25V (or larger) Axial	DK P5051
C2,C8	2	4.7uF, 25V Radial Electrolytics	DK P6036
C3,C4,C6,C9,C10 C11,C12,C13,C14, C17,C19,C20,C22	13	0.1uF Ceramic Discs	DK P4311
C5	1	18pF Ceramic Disc	DK P4003
C7,C21	2	0.01uF Ceramic Discs	DK P4300
C15,C16,C18	3	10uF, 25V Radial Electrolytics	DK P6037

RESISTORS

R1,R2,R7,R10,R18	5	10K ohm, 1/4 W, 10% Resistors	DK 10KQ
R3,R15,R16,R23	4	22K ohm, 1/4 W, 10% Resistors	DK 22KQ
R4,R5,R6,R8,R9, R13,R14,R17	8	1000 ohm, 1/4 W, 10 Resistors	DK 1.0KQ
R11,R19,R20,R21	4	4.7K ohm, 1/4 W, 10% Resistors	DK 4.7KQ
R12,R22	2	20K ohm PC-mount Potentiometers	DK QOA24
R24	1	2.7 ohm, 1/4 W, 10% Resistor	DK 2.7Q

MISCELLANEOUS

Y1	1	6.0 MHz Series Resonant Crystal	DK X026
J1	1	3.5mm Miniature Phone Jack	RS 274-297
S1,S2,S3	3	PC-mount Push-Button Switches	DK P9951
S4	1	6 Station DIP Switch	DK CT2086
S5	1	16-position BCD Rotary Switch	AMP 1-435167-1
SO1	1	40-pin DIP Socket	DK C8940
SO2	1	24-pin DIP Socket	DK C8924
SO3	1	20-pin DIP Socket	DK C8920
SO4,SO5	2	8-pin DIP Sockets	DK C8908
	1	Printed Circuit Board	SME 280311
	1	Heat Sink for U6	DK HS111
	4	Self-adhesive Rubber Feet	ALL RF-716
	1	4-40 x 1/4 Screw and Nut	DK H130
T1	1	12 Volt Wall Transformer	DK 101C

MORSEMASTER II

ARRL Lesson EPROM Code Listing

```
000 23 FF 3A 39 B8 3D 60 B0 00 E8 06 D5 A9 37 AA 74
010 FA C5 56 12 36 18 86 88 09 53 1E 96 1F 64 F6 26
020 3C 86 31 A5 74 F0 04 1F BE FF B9 FF E9 2C EE 2A
030 83 D5 B8 3E F0 A9 18 F0 AA C5 04 46 D5 B8 3E F9
040 A0 18 FA A0 C5 A5 56 46 99 7F 14 28 89 80 BF 03
050 14 28 EF 50 09 47 77 53 01 03 5F A3 AF 04 61 0A
060 05 C5 BE 05 B9 05 74 F4 53 3F 34 00 14 90 E9 66
070 EF 76 74 FA 04 1F EE 81 74 FA C5 14 8A 56 7D 04
080 61 74 F8 C5 14 8A 04 64 84 00 BC B4 B8 0E 04 94
090 BC D4 B8 0E 0A 47 53 0F E7 6C AC A3 2C 17 A3 AD
0A0 09 37 D2 AB FD 68 AD FC 13 00 AC B8 00 E8 AD ED
0B0 AD EC AD 83 01 55 01 60 01 6E 01 79 01 8E 01 9E
0C0 01 D5 02 1A 02 70 01 EF 02 04 02 E8 04 30 05 78
0D0 06 BE 08 AF 01 38 01 41 01 4B 01 53 01 63 01 70
0E0 01 98 01 CA 02 0D 01 AA 01 BA 02 64 03 58 04 4C
0F0 05 48 06 B0 00 00 00 00 00 00 00 00 00 00 00 00
100 D5 A8 E7 A8 C5 17 E3 AA BB 08 CB F7 E6 0A 99 7F
110 FA 67 AA F6 19 34 8A 24 1B 34 86 89 80 EB 27 D5
120 F8 E3 AB 34 50 C5 83 34 8A 24 0E D5 BE 05 97 FA
130 37 F2 34 A7 D2 37 A7 92 3A A7 F9 37 72 3F A7 F9
140 F7 A9 FA F7 AA EE 2E 83 D5 BB 0D 24 50 D5 BB 20
150 56 50 85 89 40 09 D2 59 95 D5 BC 09 99 BF 24 73
160 EC 68 89 40 34 77 24 77 FB 67 AB F6 71 99 BF 24
170 73 89 40 34 77 24 60 B6 82 BD 36 BE 04 EE 7D ED
180 7B 83 BD 6D 24 7B 34 8A 34 8A 0A 47 53 0F 03 99
190 A3 AC BD 47 ED 94 EC 92 83 63 6D 79 84 95 A4 A4
1A0 A4 A4 EB FD FD FD FD FD FD 00 00 00 00 00 00 00
1B0 00 00 00 00 00 00 00 00 00 00 00 00 00 00 00 00
1C0 00 00 00 00 00 00 00 00 09 12 DD 26 D6 46 CB 34
1D0 F1 FB 12 D6 24 CB 34 E7 FB 32 CF 24 CB 36 DD 99
1E0 7F 26 E1 89 80 24 DD 99 7F 74 C0 BB 00 89 80 64
1F0 C0 99 7F 74 C0 74 C0 BB 00 74 C0 89 80 64 C0 00
200 D5 74 F0 09 37 53 1F 03 0A B3 28 30 37 3F 45 4A
210 4E 54 59 5F 65 6A 6E 74 79 7F 85 8A 8E 94 99 9F
220 A8 AD B3 BC C1 C7 CC D0 BF FB 54 D4 03 80 E3 83
230 F9 53 03 03 85 E3 83 BF F7 BD 0F 54 D6 44 2C 54
240 D2 03 89 E3 83 F9 F2 3F 44 37 BF F1 44 39 54 D2
250 03 8F E3 83 F9 F2 4E 44 4A BF EB BD 3F 44 3B 54
260 D2 03 95 E3 83 F9 F2 5F 44 59 BF E5 44 5B 54 D2
270 03 9B E3 83 F9 F2 6A 44 6E BF DF BD 3F 44 3B 54
280 D2 03 A1 E3 83 F9 F2 79 44 7F BF D9 44 7B 54 D2
290 03 A7 E3 83 F9 F2 8E 44 CC BF E6 BD 1F 44 D6 BF
2A0 F6 BD 0F 54 D6 03 1A 83 F9 F2 9F 44 CC BF DC BD
2B0 3F 44 D6 BF F7 BD 0F 54 D6 03 24 83 F9 F2 B3 44
2C0 CC 54 D2 03 AD E3 83 F9 F2 C1 44 CC BF D4 44 7B
2D0 F9 83 BF FA BD 07 F9 5D AC 6F E6 E2 BE 01 74 F2
2E0 44 D6 FC 83 00 00 00 00 00 00 00 00 00 00 00 00
2F0 00 00 00 00 00 00 00 00 00 00 00 00 00 00 00 00
300 41 06 42 11 43 15 44 09 45 02 46 14 47 0B 48 10
310 49 04 4A 1E 4B 0D 4C 12 4D 07 4E 05 4F 0F 50 16
320 51 1B 52 0A 53 08 54 03 55 0C 56 18 57 0E 58 19
330 59 1D 5A 13 31 3E 32 3C 33 38 34 30 35 20 36 21
340 37 23 38 27 39 2F 30 3F 2E 6A 2C 73 3F 4C 2F 29
350 3D 31 2B 2A 21 68 2A 22 24 2D 45 02 49 04 53 08
360 48 10 54 03 4D 07 4F 0F 45 02 54 03 53 08 41 06
370 45 02 49 04 4F 0F 55 0C 52 0A 54 03 4E 05 44 09
380 04 08 12 07 1E 13 0C 0E 23 00 16 09 1A 27 05 0D
390 03 01 1F 10 19 14 15 1D 06 22 0A 0F 17 0B 18 11
3A0 02 24 1B 1C 20 21 28 2B 26 29 25 2A 2C 01 1F 15
3B0 1D 07 1E 00 00 00 00 00 00 00 00 00 00 00 00 00
3C0 0A 47 53 0F 03 DD A3 AA B9 0C FB 36 DB 43 01 46
3D0 D9 43 02 AB E9 CA EA C8 83 64 D3 64 CF 3F 44 48
3E0 4C 51 56 5C 64 6C 76 81 90 A2 B9 D8 F9 00 00 00
3F0 24 2B 24 2E 44 00 24 C8 24 4D 24 48 04 8A 04 90
```

MORSEMASTER II

EPROM Code Listing

```
000 04 23 43 4F 50 59 52 49 47 48 54 20 31 39 38 36
010 20 53 54 4F 4E 45 20 4D 54 4E 20 45 4E 47 20 43
020 4F 2E C5 23 FF 3A 39 B8 3D 60 B0 00 E8 29 D5 A9
030 37 AA 27 A8 AE F8 A3 6E AE F8 E3 6E AE E8 35 34
040 F0 54 F0 96 43 74 FA C5 56 48 36 4E 86 BF 09 53
050 0F 96 55 64 F6 26 72 86 67 A5 74 F0 04 55 BE FF
060 B9 FF E9 62 EE 60 83 D5 B8 3E F0 A9 18 F0 AA C5
070 04 7C D5 B8 3E F9 A0 18 FA A0 C5 A5 56 7C 99 7F
080 14 5E 89 80 BF 03 14 5E EF 86 09 47 53 03 03 94
090 A3 AF 04 98 19 05 0A 01 C5 BE 05 B9 05 54 00 53
0A0 3F 34 00 34 B6 E9 9D EF AD 74 FA 04 55 EE B8 74
0B0 FA C5 34 B0 56 B4 04 98 74 F8 C5 34 B0 04 9B 84
0C0 00 00 00 00 00 00 00 00 86 DC 26 D5 46 CA 14 F0
0D0 FB 12 D5 04 CA 14 E6 FB 32 CE 04 CA 36 DC 99 7F
0E0 26 E0 89 80 04 DC BB 00 99 7F 74 C0 89 80 64 C0
0F0 BB 00 99 7F 74 C0 74 C0 74 C0 89 80 64 C0 00 00
100 D5 A8 E7 A8 C5 17 E3 AA BB 08 CB F7 E6 0A 99 7F
110 FA 67 AA F6 19 34 8A 24 1B 34 86 89 80 EB 27 D5
120 F8 E3 AB 34 50 C5 83 34 8A 24 0E D5 BE 05 97 FA
130 37 F2 34 A7 D2 37 A7 92 3A A7 F9 37 72 3F A7 F9
140 F7 A9 FA F7 AA EE 2E 83 D5 BB 0D 24 50 D5 BB 20
150 56 50 85 B9 40 09 D2 59 95 D5 BC 09 99 BF 24 73
160 EC 68 89 40 34 77 24 77 FB 67 AB F6 71 99 BF 24
170 73 89 40 34 77 24 60 B6 82 BD 36 BE 04 EE 7D ED
180 7B 83 BD 6D 24 7B 34 8A 34 8A 0A 47 53 0F 03 99
190 A3 AC BD 47 ED 94 EC 92 83 63 6D 79 84 95 A4 A4
1A0 A4 A4 EB FD FD FD FD FD FD 00 00 00 00 00 00 00
1B0 BC 80 B8 0E 24 BA BC A0 B8 0E 0A 47 53 0F E7 6C
1C0 AC E3 2C 17 E3 AD 09 37 D2 D1 FD 68 AD FC 13 00
1D0 AC B8 00 E8 DA ED D3 EC D3 83 00 00 00 00 00 00
1E0 00 00 00 00 00 00 00 00 00 00 00 00 00 00 00 00
1F0 F8 A3 6E AE E8 F0 83 00 00 00 00 00 00 00 00 00
200 D5 74 F0 09 37 53 0F AB 96 10 54 7C 03 8E A3 83
210 EB 18 54 7C 03 97 A3 83 EB 22 BF EE BD 1F 54 80
220 44 0C EB 2A 54 7C 03 A0 A3 83 EB 31 F9 F2 24 44
230 1A EB 37 BF E5 44 1C EB 3F 54 7C 03 A9 A3 83 EB
240 46 F9 F2 39 44 33 EB 4E BF DC BD 3F 44 1E EB 5A
250 BF F9 BD 07 54 80 03 B2 A3 83 EB 61 F9 F2 50 44
260 48 EB 6D BF FA BD 07 54 80 03 B9 A3 83 EB 74 F9
270 F2 63 44 76 EB 7A BF D5 44 4A F9 83 BF F7 BD 0F
280 F9 5D AC 6F E6 8C BE 01 74 F2 44 80 FC 83 04 08
290 12 13 0C 0E 00 0D 16 01 02 03 06 10 17 18 19 23
2A0 05 07 09 0A 0B 0F 11 14 15 1A 1B 1C 1D 1E 1F 20
2B0 21 22 24 25 26 27 28 29 2A 01 07 15 1D 1E 1F 00
2C0 00 00 00 00 00 00 00 00 00 00 00 00 00 00 00 00
2D0 00 00 00 00 00 00 00 00 00 00 00 00 00 00 00 00
2E0 00 00 00 00 00 00 00 00 00 00 00 00 00 00 00 00
2F0 F8 A3 6E AE E8 F0 83 00 00 00 00 00 00 00 00 00
300 41 06 42 11 43 15 44 09 45 02 46 14 47 0B 48 10
310 49 04 4A 1E 4B 0D 4C 12 4D 07 4E 05 4F 0F 50 16
320 51 1B 52 0A 53 08 54 03 55 0C 56 18 57 0E 58 19
330 59 1D 5A 13 31 3E 32 3C 33 38 34 30 35 20 36 21
340 37 23 38 27 39 2F 30 3F 2E 6A 2C 73 3F 4C 2F 29
350 3D 31 2B 2A 21 68 45 02 49 04 53 08 48 10 54 03
360 4D 07 4F 0F 45 02 54 03 53 08 41 06 45 02 49 04
370 4F 0F 55 0C 52 0A 53 08 54 03 4E 05 44 09 4D 07
380 01 55 01 60 01 6E 01 79 01 8E 01 9E 01 D5 02 1A
390 02 70 01 EF 02 04 02 E8 04 30 05 78 06 BE 08 AF
3A0 01 38 01 41 01 4B 01 53 01 63 01 70 01 98 01 CA
3B0 02 0D 01 AA 01 BA 02 64 03 58 04 4C 05 48 06 B0
3C0 0A 47 53 0F 03 DD A3 AA B9 0C FB 36 DB 43 01 46
3D0 D9 43 02 AB E9 CA EA C8 83 64 D3 64 CF 3F 44 48
3E0 4C 51 56 5C 64 6C 76 81 90 A2 B9 D8 F9 00 00 00
3F0 24 2B 24 2E 00 00 04 C8 24 4D 24 48 24 B0 24 B6
```