Assembly and Operation of the

Q MULTIPLIER

MODEL GD-125

HEATH COMPANY
BENTON HARBOR,
MICHIGAN

TABLE OF CONTENTS

8/12/66

INTRODUCTION

The Heathkit Model GD-125 Q Multiplier is used with communications receivers to provide additional selectivity and signal rejection. Because its peak or null effect can be tuned across the receiver IF bandpass, the operation of the Q Multiplier is more flexible than that of a fixed frequency IF filter.

The Q Multiplier may also be used with a receiver which already has an IF filter, to obtain two simultaneous functions. For example, the IF filter could be set to peak the desired signal and the Q Multiplier used to null an adjacent signal.

When properly connected and adjusted, the Q Multiplier will not decrease receiver sensitivity. In the peak function, an audible gain will be noted on CW signals, and a carrier gain will be noted on the S meter for phone signals. However, the audio will be attenuated slightly due to narrowing of the received sidebands.

The reduced sideband reception will tend to attenuate the higher audio frequencies. This is more than compensated for by the increased readability against the surrounding QRM.

NOTE: Refer to the "Kit Builders Guide" for complete information on unpacking, parts identification, tools, wiring, soldering, and step-by-step assembly procedures.

INSTALLATION

CONNECTION TO THE RECEIVER

To put the Q Multiplier in operation, connect a coaxial cable between your communications receiver and the phono socket on the rear of the Q Multiplier. Figure 1A shows how to install the phono plug on the coaxial cable. Connect the shield of this cable to chassis ground in the receiver. Connect the inner lead to the plate circuit of the mixer stage. See Figure 1, which shows the Q Multiplier connected in a typical mixer stage. A phono socket may be installed on the rear of your receiver or you may wish to use the two spade lugs supplied with this kit.

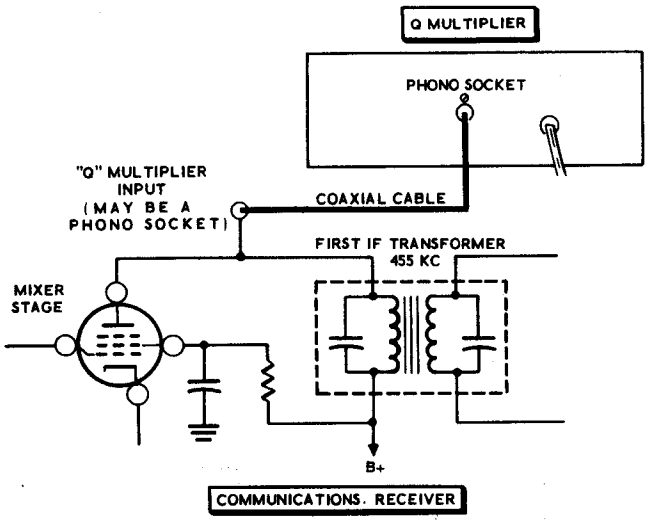

Figure 1

The connection from the mixer plate to the inner lead of the coaxial cable should be as short as possible, and isolated from other receiver circuits. If shielded wire is used for the connection between the coaxial cable and the mixer plate, the primary winding of the first IF transformer should be retuned. (Retune the transformer before attaching the Q Multiplier to the receiver.)

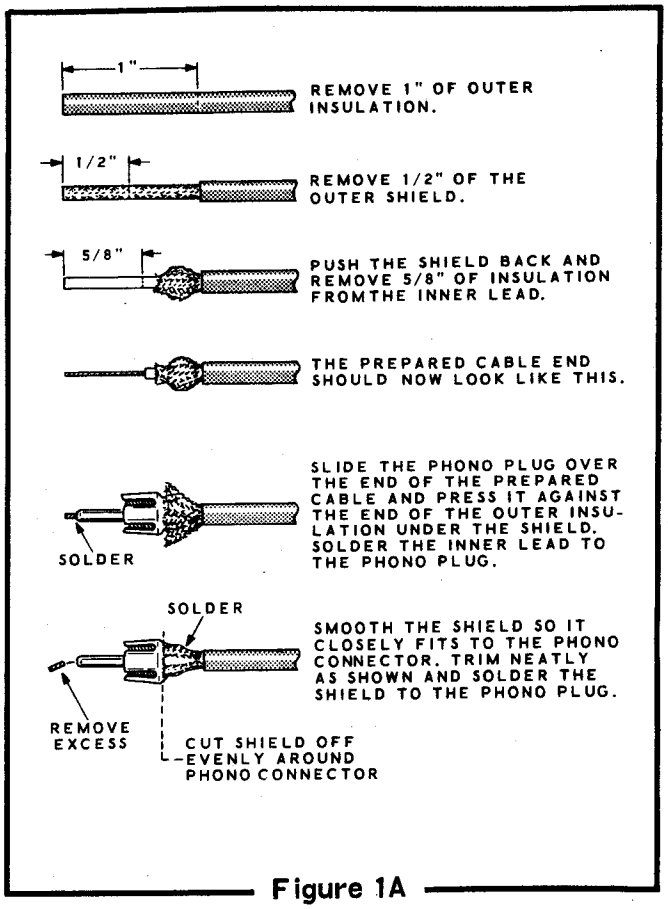

Figure 1A

This will compensate for the additional capacitance the shielded wire places across the transformer.

WARNING: Connecting the Q Multiplier to an AC-DC type of receiver, particularly the "hot chassis" type, may make the chassis and cabinet of the Q Multiplier "hot" also. To avoid this lethal shock hazard, connect the leads of an AC voltmeter between the Q Multiplier chassis and a good earth ground. If a reading of 117 volts is obtained, reverse the receiver's power plug in the power outlet. Then mark the plug and outlet to polarize them for future reference.

ALIGNMENT

( ) A small rectangular steel blade is supplied with this kit. Refer to Figure 2. Then use long-nose pliers to insert this blade into the smaller hole in the plastic nut starter. When installed, the blade end should be flush with the end of the nut starter. This can now be used as an alignment tool.

( ) For best results, the receiver IF strip should be in good alignment at the IF frequency. It would be well to check receiver alignment before proceeding.

( ) If the receiver does not have an S meter, it is recommended that a voltmeter be connected between its AVC line and ground. This meter should be set to a negative DC range. It will then act as an S meter. For best results, this meter should have a negative DC range low enough to permit a center scale deflection of the meter when the receiver is tuned to a station.

( ) Connect the Q Multiplier to the receiver. Then, with the Function switch in the OFF position, tune in a steady phone signal, or possibly a broadcast station. Be sure that the signal is centered in the IF bandpass. This can be noted by the greatest S meter reading, maximum audio signal, or by a maximum reading on the voltmeter (AVC voltage in the receiver).

Refer to Figure 3 for the location of the alignment points.

( ) Place the cabinet top shell upside down on the top of the cabinet base. This will compensate for the capacitance added when the cabinet is installed later.

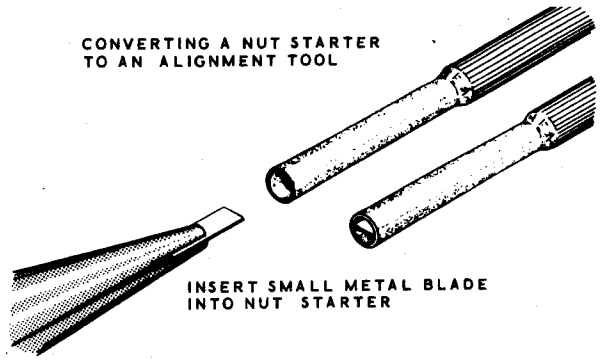

Figure 2

( ) Tune coil L1 for the highest S meter reading or loudest signal (or maximum negative DC reading on the voltmeter). When adjusting this coil, you will notice two different points at which a peak can be obtained. Use the peak obtained with the coil slug midway in the coil, not the one where the slug protrudes from the bottom of the coil. This adjustment tunes out the reactance of the coaxial cable; it will not have to be changed later.

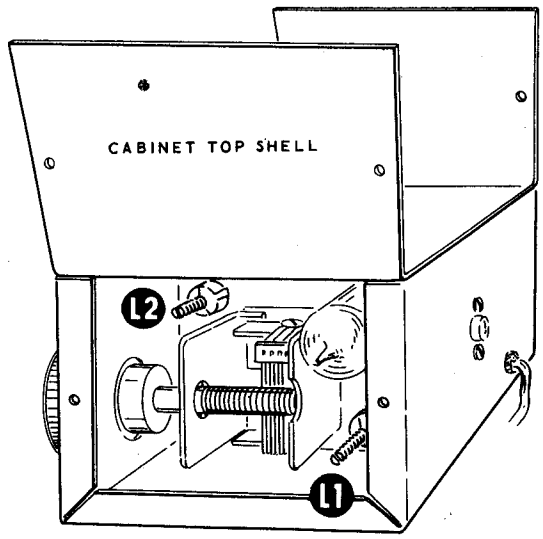

Figure 3

IN CASE OF DIFFICULTY

NOTE: Refer to the Kit Builders Guide for Service and Warranty information.

1. Recheck the wiring. Trace each lead in colored pencil on the Pictorial as it is checked. It is frequently helpful to have a friend check your work. Someone who is not familiar with the unit may notice something consistently overlooked by the constructor.

2. It is interesting to note that about 90% of the kits that are returned for repair, do not function properly due to poor connections and soldering. Therefore, many troubles can be eliminated by reheating all connections to make sure that they are soldered as described in the Soldering section of the Kit Builders Guide.

3. Make sure that the tube lights up properly.

4. Check the tube with a tube tester or by substitution of a tube of the same type and known to be good.

5. Check the values of the component parts. Be sure that the proper part has been wired into the circuit, as shown in the pictorial diagrams and as called out in the wiring instructions.

6. Check for bits of solder, wire ends or other foreign matter which may be lodged in the wiring.

7. If, after careful checks, the trouble is still not located and a voltmeter is available, check voltage readings against those found on the Schematic Diagram. NOTE: All voltage readings were taken with an 11 megohm input vacuum tube voltmeter. Voltages may vary as much as 10% due to line voltage variations.

8. A review of the Circuit Description will prove helpful in indicating where to look for trouble.

9. Make sure the receiver that is being used with the Q Multiplier has an IF between 450 and 500 kc.

SPECIFICATIONS

Operating Frequency	450 - 500 kc.
Switch Functions	OFF, PEAK, NULL, BROAD.
Tube-Diode Complement	1 - 12AX7 tube, multiplier. 1 - Silicon diode, rectifier.
Power Requirements	105-125 volts AC, 50/60 cps, 4-1/2 watts.
Cabinet Size	9-1/32" wide x 2-9/16" high x 3-5/8" deep.
Net Weight	2-1/2 lbs.

CIRCUIT DESCRIPTION

Refer to the Schematic (fold-out from Page 19) while reading the following description.

CIRCUIT THEORY

The Q Multiplier, which is connected across the input IF transformer of your communications receiver, acts like a very high Q tuned circuit. And since all high Q circuits have a very sharp resonance point, the Q Multiplier can be used for either of the following purposes:

1. It can be used to peak a desired signal by performing like a very high Q parallel resonant circuit. See Figure 4. As the Q is increased, the side slopes of the resonant peak become steeper and steeper. Therefore, at the resonant frequency of the Q Multiplier, the desired signal "sees" a very high impedance and passes on to the IF amplifier. All other frequencies "see" a relatively low impedance and are shunted to ground. The Tuning control on the Q Multiplier adjusts the resonant peak to any point in the IF bandpass.

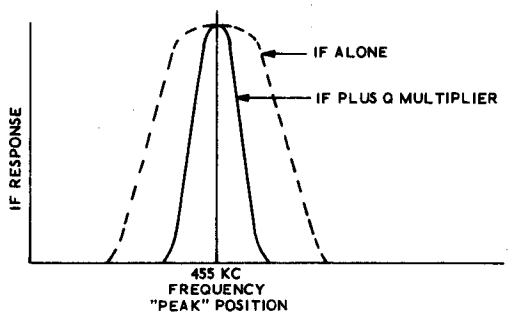

Figure 4

2. It can be used to null out an unwanted signal by performing like a very high Q series resonant circuit. See Figure 5. Here, the unwanted signal "sees" a very low impedance and is shunted to ground by the Q Multiplier. All other signals see the normal high impedance and pass on through the receiver. The null point can be adjusted to any point in the IF bandpass, therefore a heterodyne adjacent to the desired signal can be dropped into the notch (null point) and eliminated.

CIRCUIT OPERATION

The Q Multiplier circuit is centered around coil L2 (in the plate circuit of tube V1B), which has a Q of 200 or more. The Q of this coil is amplified to approximately 4000 by the positive feedback that is coupled back to the grid of tube V1B through capacitor C9. The resonant frequency of the circuit is adjusted by capacitor C7.

The output signal, for Peak or Broad operation, is coupled through the Function switch, capacitor C1, and the coaxial cable to the communications receiver. The high Q that this circuit introduces into the receiver compares favorably with the Q of the quartz crystal in a crystal filter.

For Null operation, the output signal is coupled through lugs 7 and 9 of the Function switch, and through capacitor C4 to the grid of tube V1A. Tube V1A inverts the signal, making it 180 degrees out of phase with the IF response of the receiver. The inverted signal is then coupled through capacitors C3 and C1, and the coaxial cable, to the receiver where it causes a sharp null in the IF response.

Coil L1 is used to tune out the capacitance of the coaxial cable.

POWER SUPPLY

The line voltage is transformer coupled to half-wave rectifier diode D1. The rectified voltage is then filtered by a pi-network consisting of capacitors C10A and C10B, and resistor R9. Resistor R10 and the neon lamp make up the pilot lamp circuit. The pilot lamp indicates the presence of B+.

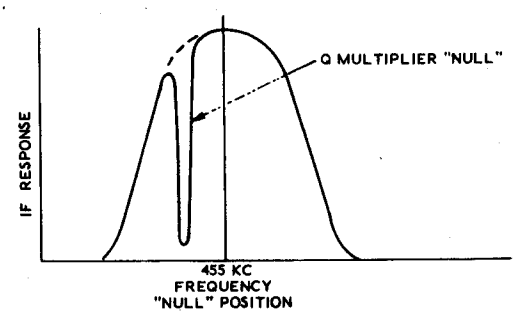

Figure 5

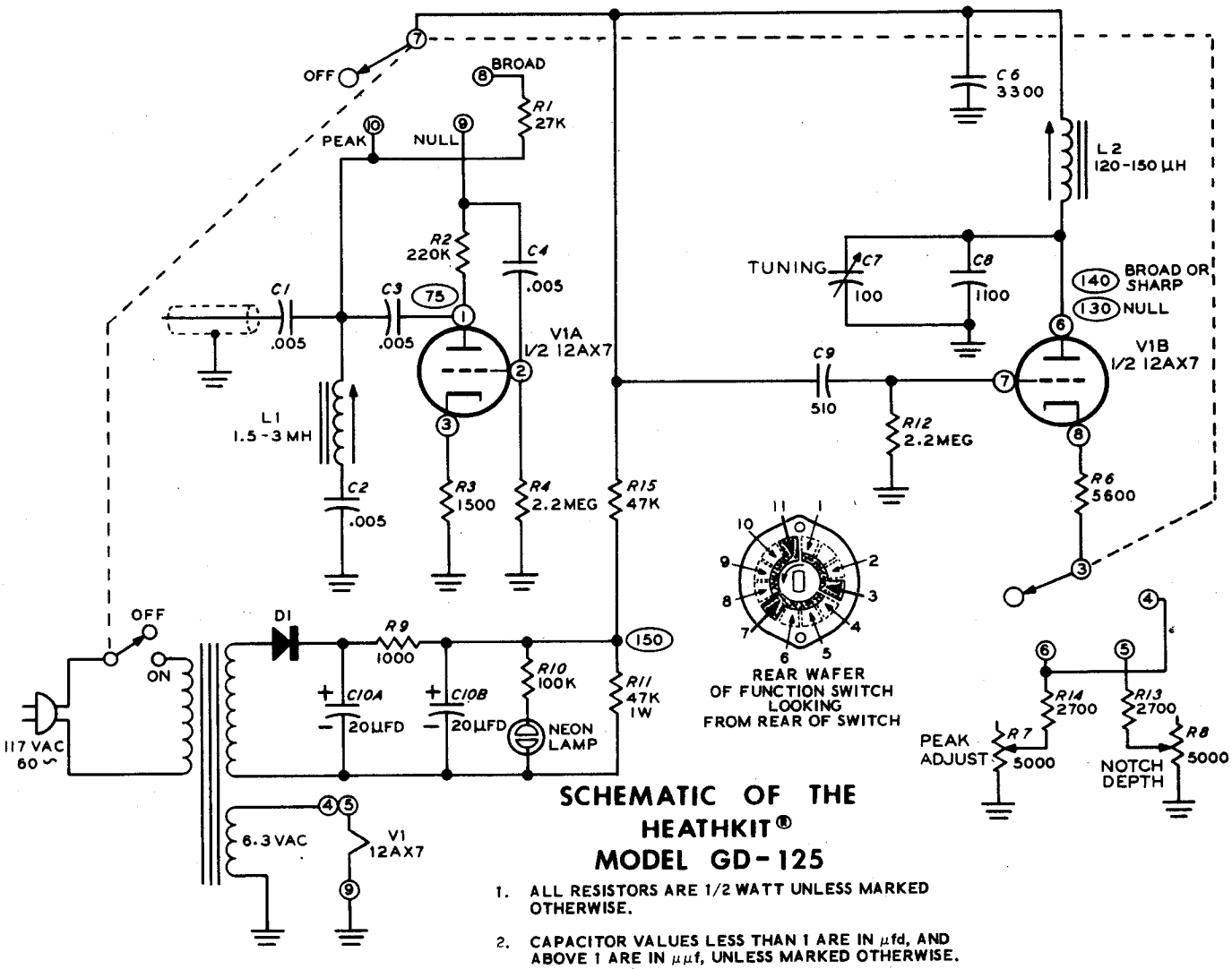

SCHEMATIC OF THE HEATHKIT® MODEL GD-125

1. ALL RESISTORS ARE 1/2 WATT UNLESS MARKED OTHERWISE.
2. CAPACITOR VALUES LESS THAN 1 ARE IN µfd, AND ABOVE 1 ARE IN µµf, UNLESS MARKED OTHERWISE.
3. FUNCTION SWITCH SHOWN IN OFF POSITION.
4. VOLTAGE READINGS MAY VARY ±10%.
5. ALL DC VOLTAGES ARE INDICATED IN ELLIPSES.